# axial

COMPARISON BY: **gauge length**

Visit our website at **www.epsilontech.com**

## 3542

- **MOST VERSATILE MODEL: General purpose extensometers for axial tensile, compression, and cyclic testing**
- Standard gauge lengths from 0.5 to 2 inches (10 to 80 mm)
- Measuring ranges from 5% to 100%+ strain
- Elevated and low temperature models available (-265 °C to 200 °C extremes)
- Suitable for use on most engineering materials

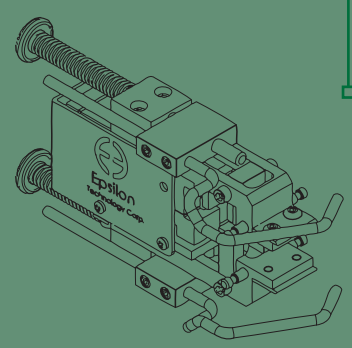

## 3542L

- **Long gauge length, low strain range extensometers for axial tensile, compression, and low cycle fatigue testing**
- Standard gauge lengths from 4 inches (100 mm) and above
- Standard measuring ranges of 0.5 inches (12.5 mm) and below
- Elevated and low temperature models available (-265 °C to 200 °C extremes)
- Suitable for use on most engineering materials

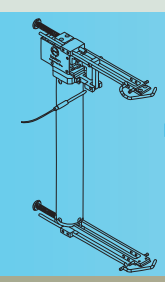

0 3 10 12 20 25 50 80 100 250 500

mm gauge length

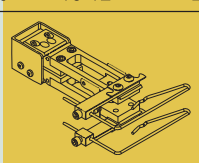

## 3442

- **General purpose miniature extensometers for axial tensile, compression, and cyclic testing**
- Designed to be used in those applications where available space and weight is a concern
- Standard gauge lengths from 3 mm to 12.5 mm (0.5 inches) standard; larger gauge lengths are available
- Measuring ranges from 5% to 100%+ strain
- Elevated and low temperature models available (-265 °C to 200 °C extremes)
- Suitable for use on most engineering materials

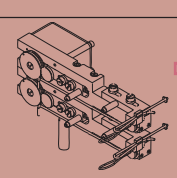

## 3800

- **High elongation extensometers for axial tensile testing**
- Standard gauge lengths from 1 inches (25 mm) and above
- 20 mm gauge length option is available through a special adapter
- Measuring range of +5, +10, or +20 inches (+125 mm, +250 mm, or +500 mm)
- Designed for testing high elongation materials such as rubbers and other elastomers

## 3543

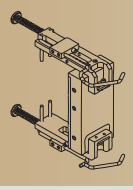

- **Long gauge length, large strain range extensometers for axial tensile testing**
- Standard gauge lengths from 2 inches (50 mm) and above
- Measuring range of +1, +2, or +4 inches (+25 mm, +50 mm, or +100 mm)
- Designed for testing rebar specimens to failure, but can be used for testing most engineering materials
- Can be used to test twisted cable with the addition of the twist option